RN51s

BLE & 2.4Ghz RF Module

RN51s is an ultra-low power 2.4 GHz wireless System on Chip (SoC) module, a 32 bit ARM® Cortex™-M0 CPU, flash memory, and analog and digital peripherals.

RN51s can support **Bluetooth® Low Energy** and a range of proprietary 2.4 GHz protocols, such as Gazell from Nordic Semiconductor.
Fully qualified Bluetooth Low Energy stacks for RN51s are implemented in the S100 series of SoftDevices.
The S100 series of SoftDevices are available for free and can be downloaded and installed on RN51s independent of your own application code.

Application

- Computer peripherals and I/O devices
  - Mouse, Keyboard, Multi-touch trackpad
- Remote control toys
- Interactive entertainment devices
  - Remote control, 3D Glasses
  - Gaming controller
- Personal Area Networks
  - Health/fitness sensor and monitor devices
  - Medical devices
  - Key-fobs + wrist watch

Features

- 2.4 GHz transceiver
  - -93 dBm sensitivity in Bluetooth® low energy mode
  - 250 kbps, 1 Mbps, 2 Mbps supported data rates
  - TX Power -20 to +4 dBm in 4 dB steps
  - TX Power -30 dBm Whisper mode
  - 13 mA peak RX, 10.5 mA peak TX (0 dBm)
  - RSSI (1 dB resolution)

- ARM® Cortex™-M0 32 bit processor
  - 275 µA/MHz running from flash memory
  - 150 µA/MHz running from RAM
  - Serial Wire Debug (SWD)

- S100 series SoftDevice ready
- Memory
  - 128 / 256 kB flash Program memory
  - 16 kB RAM
- Support for non-concurrent multiprotocol operation
  - On-air compatibility with nRF24L series
- Flexible Power Management
  - Supply voltage range 1.8 V to 3.6 V

RISENET

RN51s BLE & 2.4Ghz RF Module

Features

Performance	
RF Chip	nRF51822
Data Rate (MAX)	2 Mbps
Transmit Power	< 4 dBm
Receiver Sensitivity	-93 dBm @ 1 Mbps BLE
Features	
Frequency Band [MHz]	2400~2483.5 MHz
Modulation Techniques	GFSK
GPIO	29 Pins
Interface	SPI, UART, I2C
Operating Temperature	-25℃ to +75℃
Dimensions (L x W x H)	19.8 ± 0.3 mm x 14.6 ± 0.3 mm x 2.2 ± 0.3 mm
Programmability	
RAM Memory	16 kByte
Flash Memory	128 / 256 kByte
Networking and Security	
Encryption	AES
Power Requirements	
Operating Voltage	1.8 to 3.6 V
Transmit Current consumption LDO at 1.8V	16 mA (16 mA @ 4 dBm / 10.5 mA @ 0 dBm)
Receiver Current consumption LDO at 1.8V	13 mA @ 1 Mbps
IDLE Current	3 μA

Block Diagram

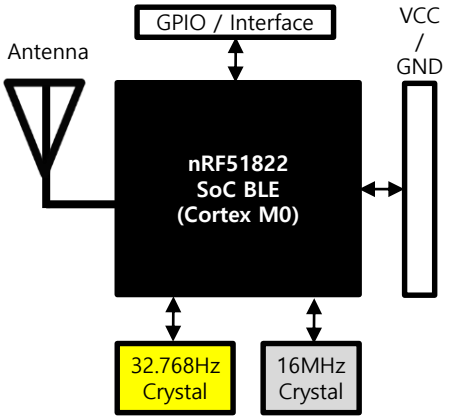

Pin Configuration

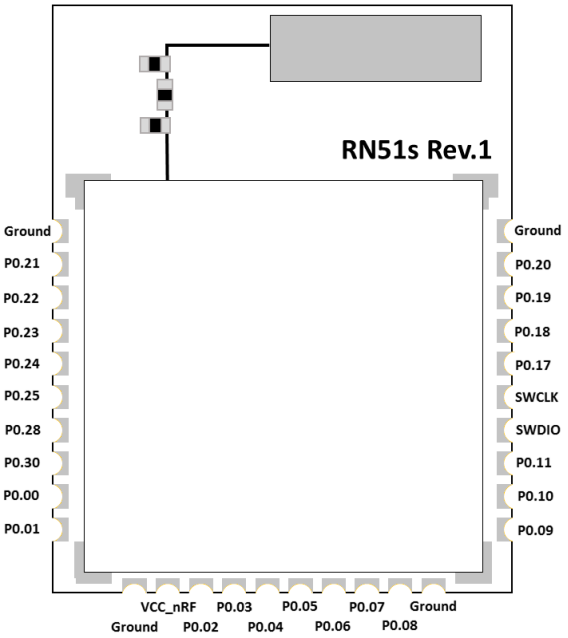

Address : 55, Hanyangdaehak-ro, Sangnok-gu, Ansan-si, Gyeonggi-do, Republic of Korea
(No.524, Business Incubator)
Homepage : www.risenet.net
E-Mail : risenet@risenet.net Fax : +082) 31-624-5256

RISENET